WA3RNC 40 Meter CW Transceiver Quick-Kit

Acrylic NO-SOLDER 40M Xceiver
Assembly Instructions

Fig. 1

- Covers approximately 7.017 to 7.047 MHz.
- Output is adjustable from 0 to 5 watts with rear panel control.
- 12 dB Rx attenuator switch on rear panel with front panel indicator.
- Sharp 350Hz bandwidth (-6dB) crystal IF filter for single signal reception.
- Receiver sensitivity (MDS) 0.15 microvolts, image rejection 68dB
- Transmitter harmonics and spurs at -55dBC assures FCC compliance.
- Rx current consumption about 35 ma, Tx 400-800ma at 12V input
- PC Board is completely assembled, tested, and aligned.
- User installs tuning and volume control harnesses, and you’re done.
- Acrylic “Day Glow” cabinet is formed and predrilled.

Four packets are included. The completely wired and tested PC board is contained in packet 1. Packet 2 contains 4 short nylon standoffs, 4 longer standoffs, 8 nylons m3 screws, and 4 rubber self-adhesive rubber bumpers. Packet 3 contains the volume control harness, knob, and an LED holder. Packet 4 contains the tuning harness, tuning knob, and an LED holder.

Start with packet 1. Carefully remove the PC Board observing common antistatic precautions. Remove the contents of packet 2 and install the short standoffs on the bottom of the PCB by threading the longer ones through the board and into the short ones. Set the board and the screws aside, and install the rubber bumpers on the bottom of the acrylic chassis about ¼ inch from the corners.

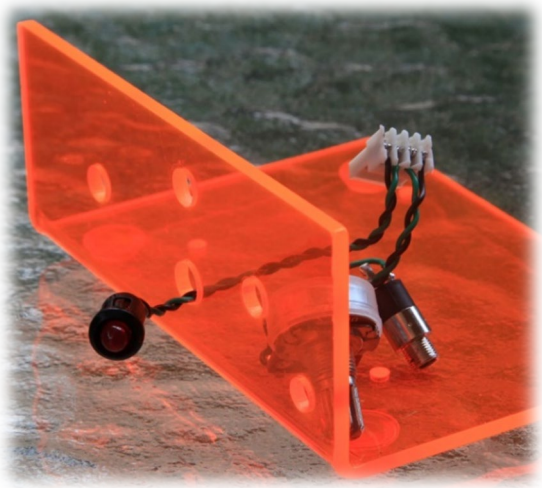

Remove the volume control harness from packet 3, and insert the LED through the lower center hole in the acrylic panel. Insert the LED into the holder as far as it will go, then carefully push the holder and LED back into the panel. Install the volume control through the right side panel hole and secure with the provided hardware. Mount the phone jack in the hole near the volume control. Be careful not to scratch the acrylic panel when tightening the nuts. Install the volume control knob.

Remove the tuning control harness from packet 4, and insert the LED through the upper center panel hole in the panel. Insert the LED into the holder as far as it will go, then carefully push the holder and LED back into the panel. Install the tuning potentiometer through the left side panel hole and secure with the supplied hardware. Install the tuning knob.

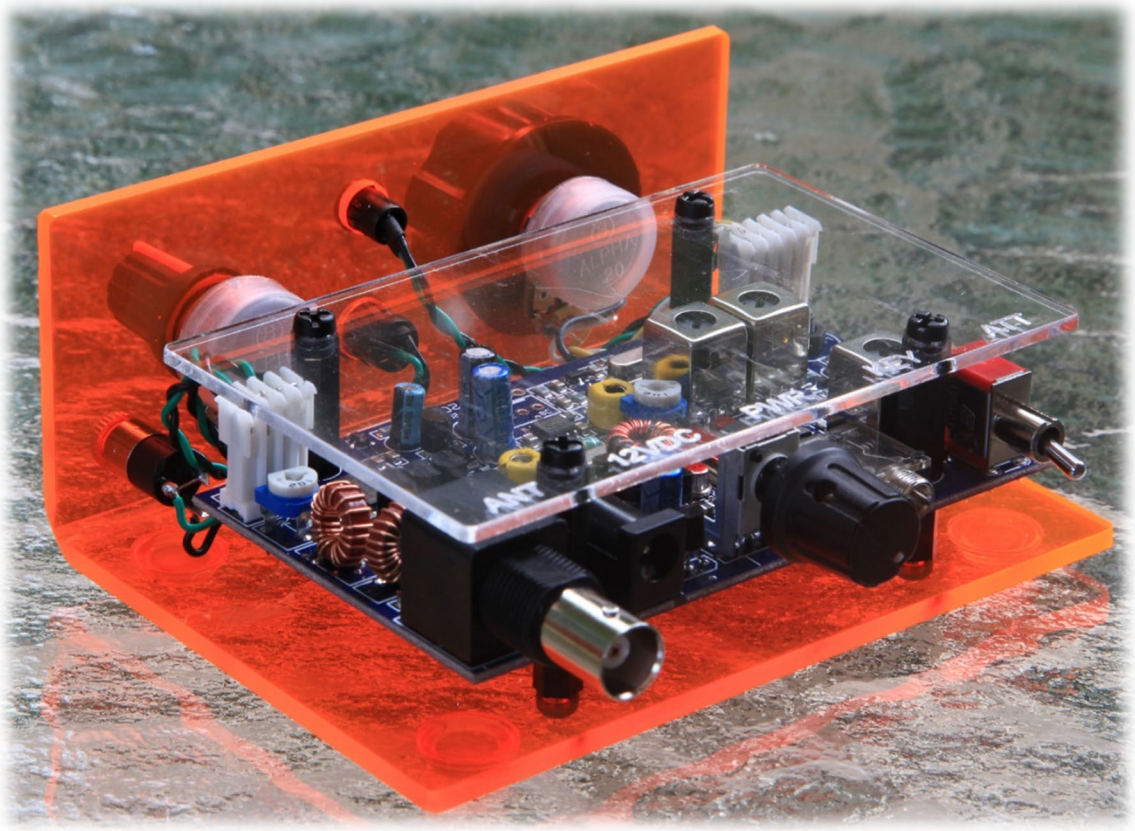

Position the PC board assembly onto the acrylic chassis with the pin headers toward the panel and the jacks and power pot to the rear. Secure the board to the chassis with 4 of the 3mm nylon screws. Connect the volume control harness connector to the 4-pin header on the right side of the board. Note that the connector will not mate if reversed. Connect the tuning control harness to the 5-pin header on the left side of the board. Neatly dress the harness wires. Install the clear plastic protector on the upper standoffs with the 4 remaining m3 screws. Check that the engraving is oriented properly. This completes construction.

Notes on Operation

1) The transceiver operates on 12 to 14 volts DC. The power connector center pin (2.1mm) is positive. Receive current consumption is about 35 ma. Transmitter power consumption is 400 to 800 ma.
2) Transmitter power output is adjustable with the rear panel knob from near 0 to 5 watts or more. The output impedance is 50 Ohms. The final RF output FETs are intended for CW duty cycles. Do not hold the key down for more than a few seconds at high output levels. Please turn the power level down as much as is possible when adjusting an antenna tuner to prevent abuse to the transmitter FETs, and to lessen QRM.
3) The switch on the rear panel is a receiver 12 dB attenuator. When engaged, the small LED is illuminated in the top center of the panel as an indicator. This switch has no effect on the transmitter.
4) The LED at the lower center of the panel indicates the relative strength of the signal. The LED sensitivity can be adjusted with trimmer potentiometer R11. Adjust for a dim glow with no signal. If you wish to disable this LED, turn R11 fully counterclockwise.
5) The transmitter sidetone level will vary as the power is adjusted. The level can be adjusted with trimmer potentiometer R7 if desired. The sidetone you hear is the actual transmitted signal being heard by the receiver.
6) Do not use “mono” plugs for the audio out. Use only “stereo” connectors. Mono plugs will short the audio output and may cause damage to the unit. You may use either type of plug for the key jack.
7) There is no power on-off switch provided. Remember to disconnect the battery or power supply when use is discontinued.
8) Use only batteries or a regulated power supply rated at one amp or more, and keep the voltage between 10.5 and 14.5 volts with 12.5 volts being nominal. Lower voltages may affect stability, and higher voltages may damage components. Do not use an unregulated “wall wort” type power supply.

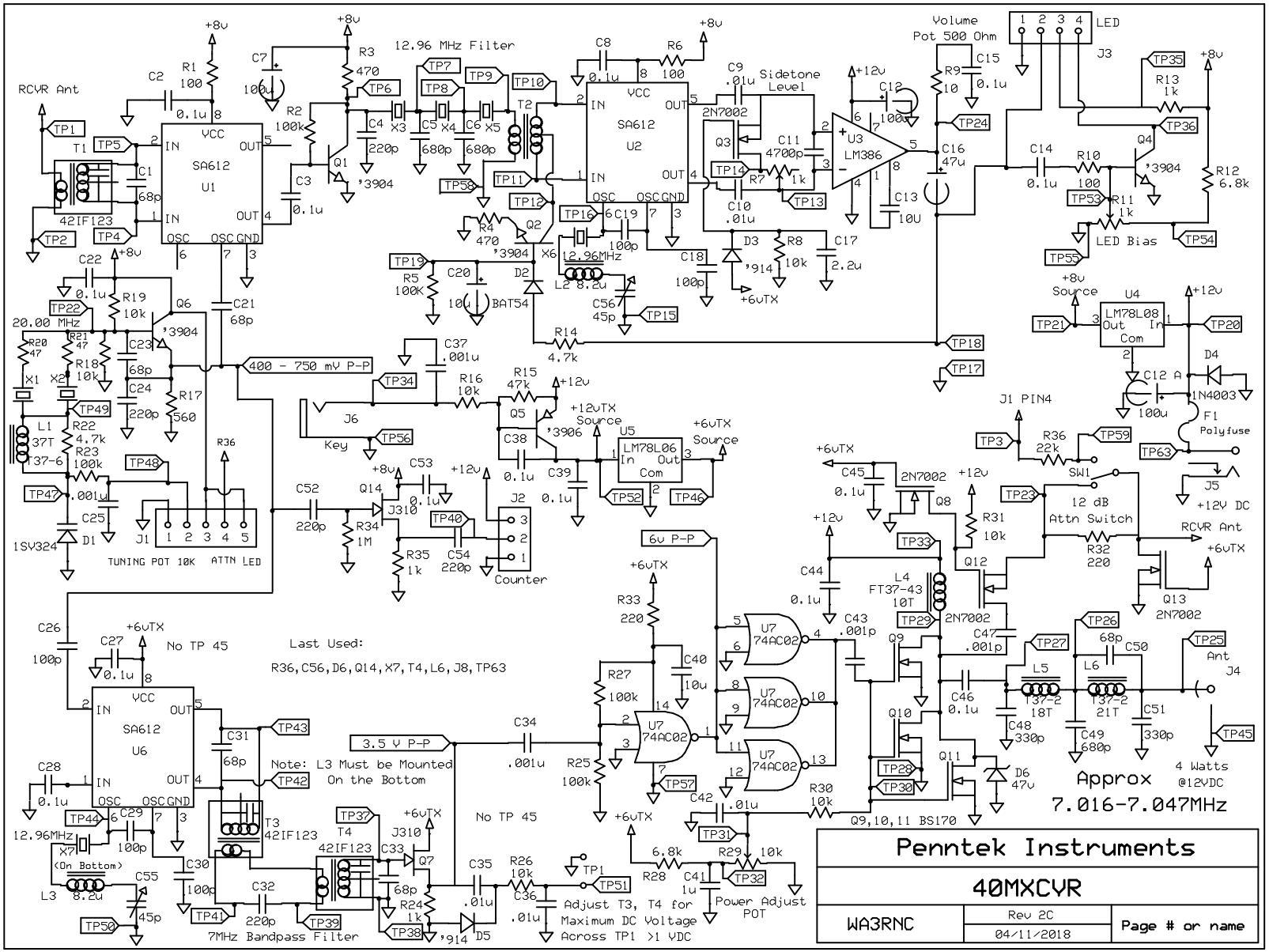
RCVR Ant
12.96 MHz Filter
Sidetone Level
Volume Pot 500 Ohm
LED
LED Bias
20.00 MHz
400 - 750 mV P-P
Key
TUNING POT 10K
ATTN LED
Counter
6v P-P
3.5 V P-P
Last Used:
R36,C56,D6,Q14,X7,T4,L6,J8,TP63
No TP 45
Note: L3 Must be Mounted On the Bottom
7MHz Bandpass Filter
Adjust T3, T4 for Maximum DC Voltage Across TP1 >1 VDC
Power Adjust POT
12 dB Attn Switch
RCVR Ant
+12V DC
Ant
4 Watts @12VDC
Approx 7.016-7.047MHz
Penntek Instruments
40MXCYR
WA3RNC
Rev 2C
04/11/2018
Page # or name

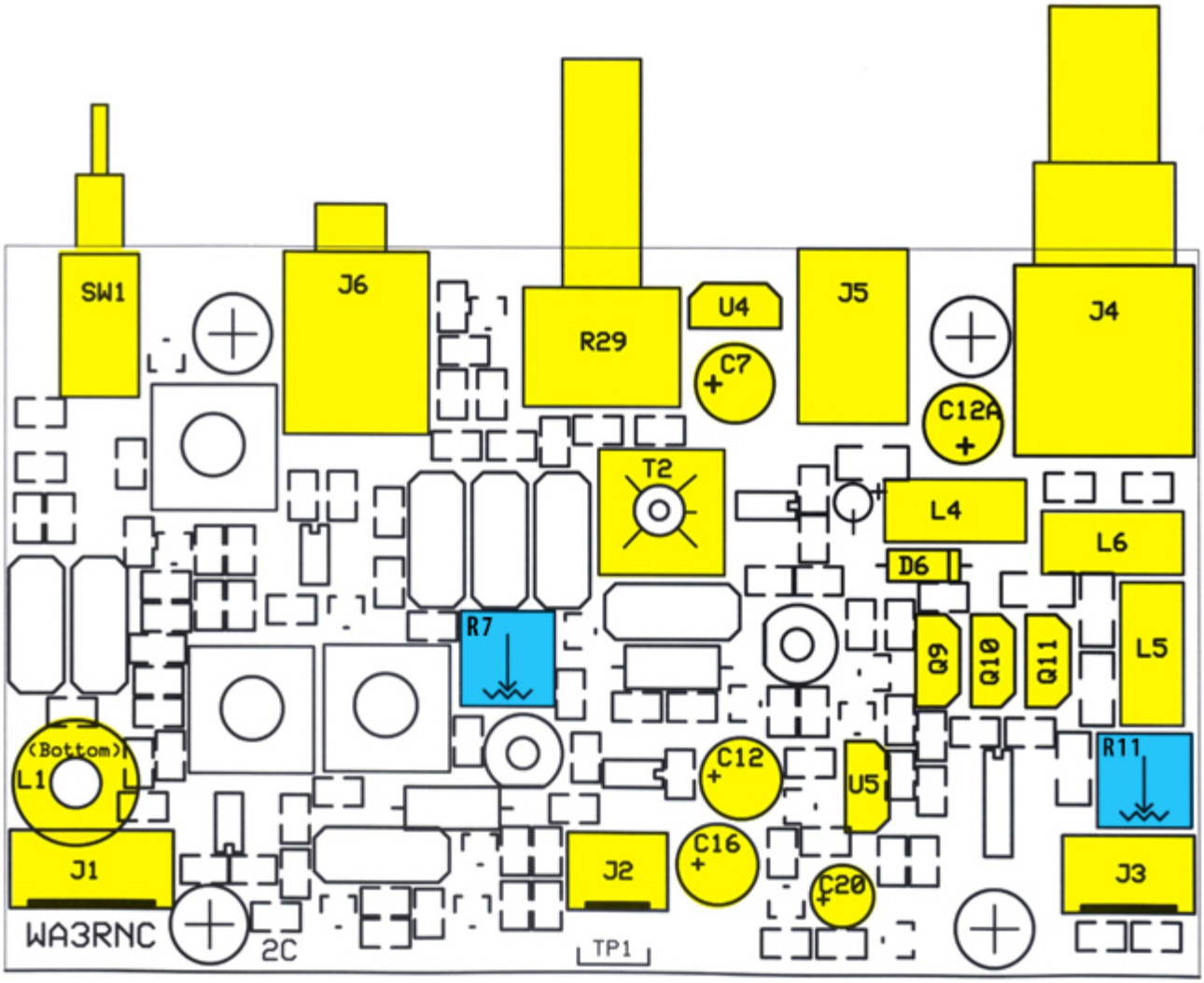

Builder installed parts are shown in yellow

R7 = Sidetone level adjust pot (shown in Blue)
R11 = LED Bias adjust pot (shown in Blue)